Stat-X® Aerosol Fire Suppression

Stat-X® Dual Release Panel (SDRP)

Installation, Operation, and Owner's Manual

Table of Contents

1. Introduction to the Stat-X Dual Release Control Panel (SDRP)

The SDRP **Part No. 830001** provides automatic fire detection and releasing capability for up to four (4) Stat-X generators without the need for direct power connection. Replaceable internal lithium batteries supply power to the control panel for up to three (3) years in service, even after storage. Dual detection and release zones are provided for both automatic and manual actuation of the fire suppression system, as well as a manual release for both zones simultaneously. The SDRP is specifically designed for rugged commercial and military on and off-road vehicle use.

A fully potted, lightweight aluminum enclosure surrounds the military qualified electronic components. The SDRP provides electrical supervision of fire detection, release, manual activation as well as battery condition. The SDRP includes a maintenance/transport guarded toggle switch that can be secured in the "Disarm System" position to disable the system. This feature is used to extend storage life as well as prevent unwanted discharge during transport or vehicle maintenance.

A second momentary action guarded toggle switch is provided to perform an on-command system test of circuit integrity and battery condition. When commanded, the test switch initiates a built-in test of the fire suppression system and the panel indicates system status by illuminating either a green “System OK” LED or a yellow “System Trouble” LED.

Batteries must be replaced as follows …

- Every three (3) years or ...
- If a system trouble condition persists or …
- Following a system discharge event.

2. Quick Installation Overview

Perform a Fire Hazard Analysis

- A detailed Fire Hazard Analysis is beyond the scope of this manual. However, a Fire Hazard Analysis must be conducted by a trained individual familiar with the process being protected prior to system installation. At a minimum, the Hazard Analysis must define potential flammable materials (fuel) and potential process failure which could result in combustion (heat source).

- A reliable automatic fire detection system must be located to provide fast and accurate fire detection. The method of detection should also provide for ease of testing and maintenance without interfering with normal process operation and maintenance.

- Actuation wiring must be located away and protected from potential hazard areas. All wiring must be installed using quality materials and must be protected from corrosion and other possible damage to circuits.

Determine Control Panel Location

- The SDRP must be located where periodic testing and maintenance can be performed. The toggle switches and LED display must be accessible and visible. While the SDRP contains certain protection from the elements, it's always good practice to keep electronics away from water, oil, and other conductive materials.

- Ensure the SDRP is not located in the hazard area and is protected in some manner against high temperatures.

- Mount the SDRP to a flat, stable surface

- **Battery replacement is periodically required.** The SDRP panel must be installed such that access to mounting hardware is available.

Determine Manual Release Switch Location

- If the Manual Release Switch PN 830003 is to be installed, ensure the switch is located in an accessible location in the path of egress between 42" and 48" above the floor. While the Manual Switch is designed to be protected against the elements, it's always good practice to keep electronics away from water, oil and other conductive materials.

Thermal Detection Methods and Field Wiring

- The SDRP operates using class B detection as defined by NFPA 72 National Fire Alarm and Signaling Code. Normally open sensors wired in parallel are used to provide thermal detection. Electrical Supervision of the detectors and detection circuit wiring is provided by the SDRP through a 470k ohm end of line resistor.

- If the SDRP senses a wiring break, a Trouble condition is displayed when the "Test" toggle switch is operated via a yellow LED at the SDRP.

- If the SDRP senses a wiring or thermal detector closure, the SDRP will automatically actuate the connected Stat-X generators.

- Do not route field wiring over objects which may damage the wiring due to vibration, high temperature, or sharp edges or corners.

- Add drip loops as needed

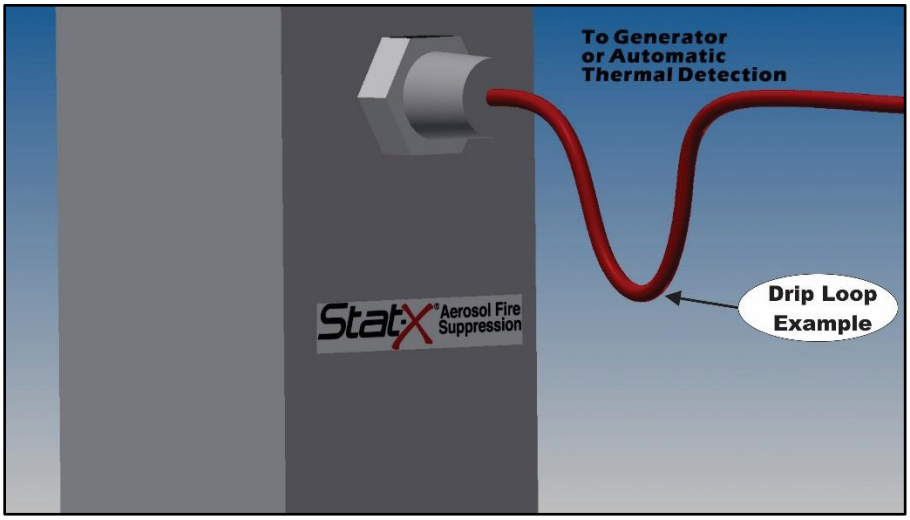

Figure 1 - Drip Loop Example (use for detectors and generators as needed)

Stat-X Generator Location and Operation

- Stat-X generators must be securely mounted and aimed per the Hazard Analysis.

- Field wiring from the SDRP to each generator may be wired in series or in parallel.

- Only two generators may be wired to each actuation zone.

- Ensure the wiring connection from the SDRP field wiring to each generator is tight, clean and environmentally sealed. Corrosion and poor electrical connections will add electrical resistance to the actuation circuit. Clean and tight electrical connections reduce the opportunity for problems.

3. Component Description

a. SDRP PN 830001

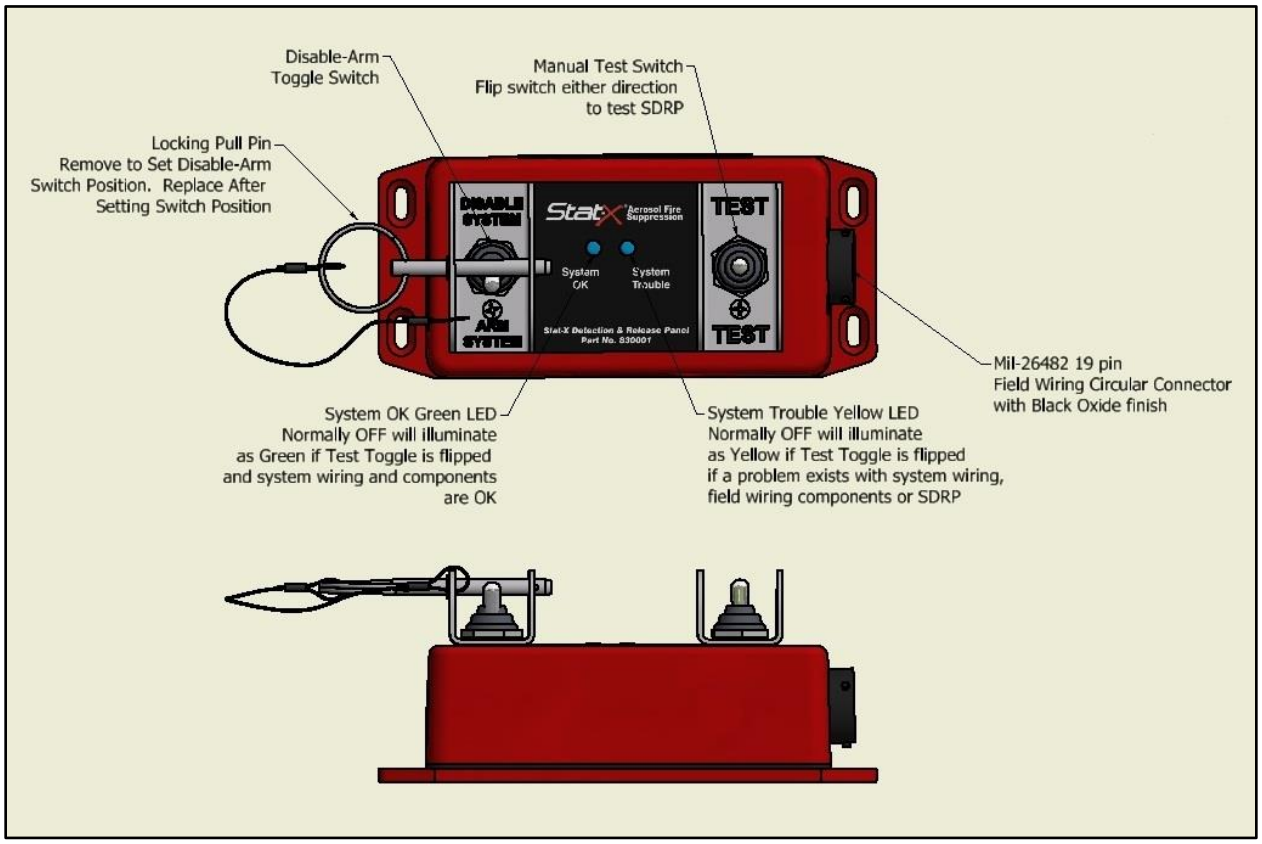

Figure 2 - SDRP Controls and Indications

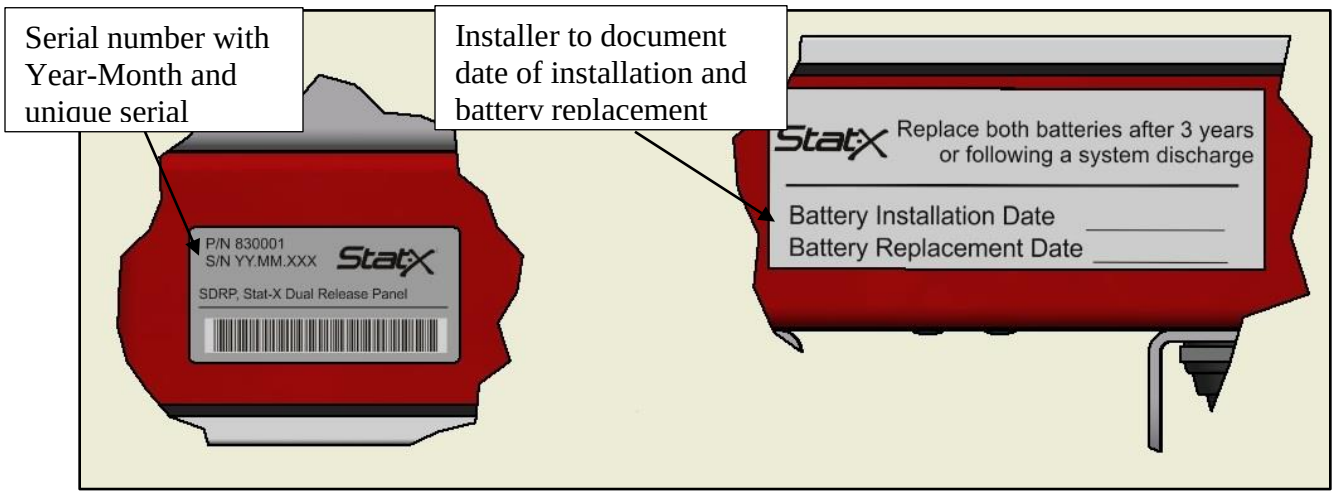

Figure 3 - SDRP Labeling

The SDRP panel includes two detection zones and two releasing zones. The SDRP can be ordered in one of two programming configurations.

PN 830001 – Dual Detection Zones and Dual Releasing Zones. Either detection zone will actuation both actuation zones. A single dedicated Manual Input Switch will also actuate both actuation zones.

PN 830001-01 – Dual Detection Zones and Dual Releasing Zones. Each detection zone will actuate individual separate actuation zones. A single dedicated Manual Input Switch will also actuate both actuation zones.

Detection Zones and Actuation zones cables are identified at the SDRP primary cable with a white label and colored ty-wraps.

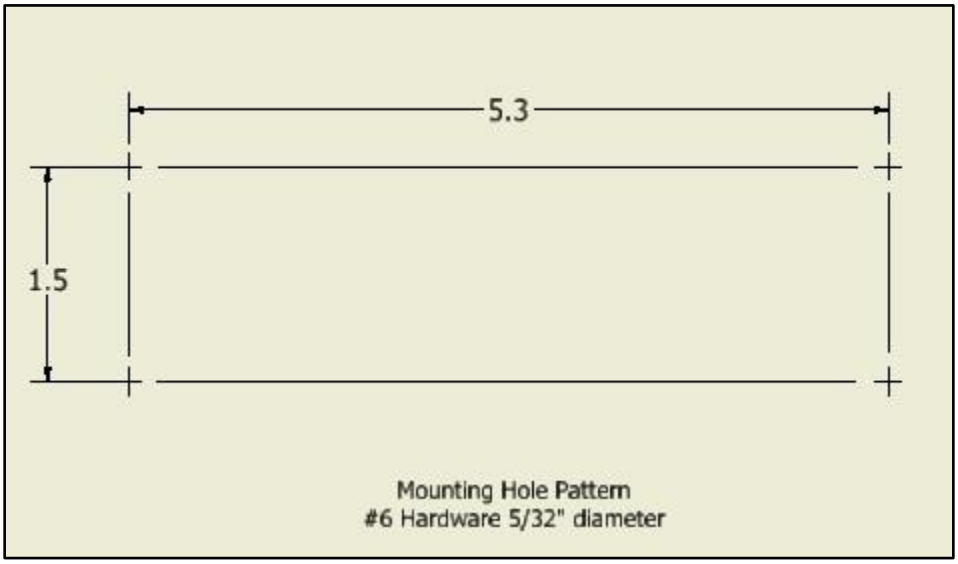

Figure 4 - SDRP mounting hole pattern

b. SDRP Cable Harness Assembly

The SDRP Cable Harness PN 830006 provides the connection between the SDRP and field wiring. The SDRP Cable Harness is available in two separate configurations – pre-terminated and unterminated. The pre-terminated version PN 830006 uses Deutsch DTM series connectors and a single MIL-Std circular connector. The unterminated version is provided with unstripped output cables. Both cable versions use color coded ty wraps along with labels which indicate the cable/wire function.

Note: It's important to note that while the Stat-X generators are not polarized, the Alarm Test Module PN 830002 which connects to the actuation circuits is polarized.

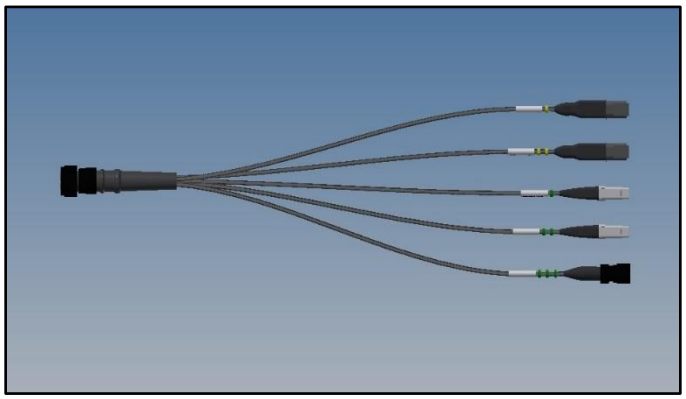

Figure 5 - Terminated Cable Assy part no. 830006

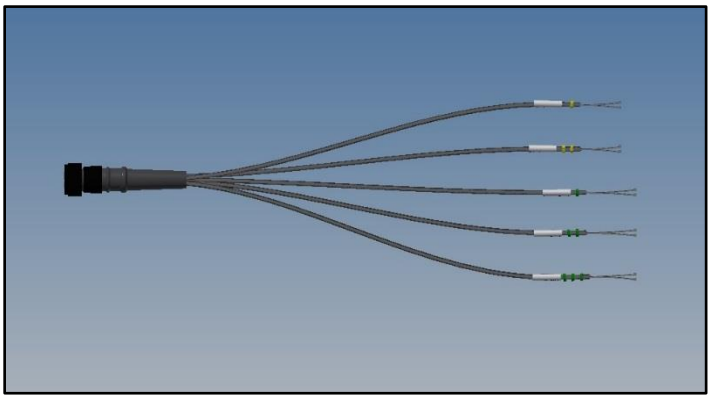

Figure 6 - Unterminated Cable Assy PN. 830006-01

Circuit	Ty Wrap Color	Black Wire	White Wire	Mating Deutsch/ITT Terminal	Mating Deutsch/ITT Connector	Mating Deutsch Wedgelock
Actuator #1	Qty 1 Yellow	(+)	(-)	0462-201-2031	DTM06-2S-E007	WM2S
Actuator #2	Qty 2 Yellow	(+)	(-)	"	"	"
Detection #1	Qty 1 Green	(+)	(-)	0460-202-2031	DTM04-2P-E007	WM-2PB
Detection #2	Qty 2 Green	(+)	(-)	"	"	"
Manual Release Switch	Qty 3 Green	(+)	(-)	430-8560-411	KPTC2E8-4PA206	n/a

c. Alarm Test Module PN 830002

The Field Test Alarm Module provides the ability to field load test actuation circuits using a resettable device. The Alarm Module is installed in the actuation circuitry and provides a simulated Stat-X generator without the danger of false discharge. The Alarm Module gives the system installer the ability to place a resettable simulator in place while installing and commissioning a system. The Alarm Module also provides the field service technician the ability to “live test” the SDRP panel and detection circuitry. When a detection circuit “closes” in Alarm, the Alarm Module senses the electrical load and simulates a system actuation. A red LED in the Alarm Module verifies an actuation signal was sent by the SDRP panel. When the Alarm condition (detection circuit closure) is repaired or reset, the push to reset button on the front of the Alarm Module is used to clear the alarm condition. Multiple Alarm Modules may be used to verify the operation of separate actuation circuits

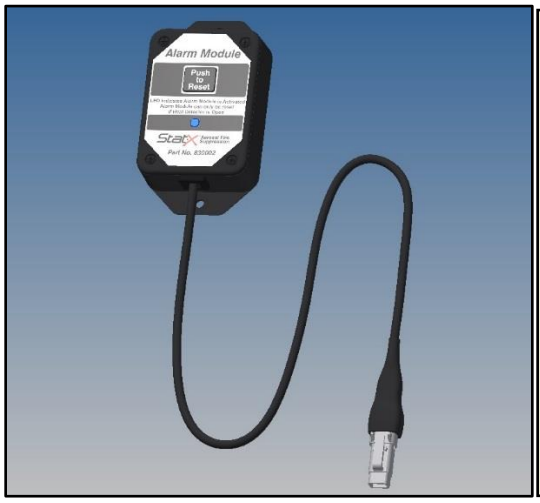

Figure 7 - PN. 830002 Alarm Test Module

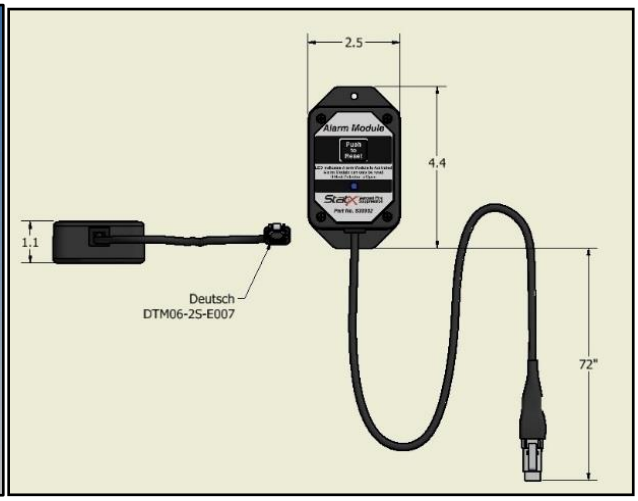

Figure 8 - Alarm Test Module dimensions

The Alarm Module is polarized as positive #2, negative #1. The connector is a Deutsch DTM06-2S connector which mates to a Deutsch DTM04-2P at the SDRP Actuation Cable.

d. Manual Release Toggle Switch part no. 830003

The Manual Release Switch PN 830003 provides a manual means of actuating the SDRP control panel. Both Automatic Fire Detection and an NFPA recommended manual means of system actuation are provided by the SDRP panel. The Manual Release Switch uses a rugged, proven MIL-26482 metal shell connector to link the manual switch to the SDRP panel manual release input circuit. The normally open toggle switch used with the Manual Release Switch is protected by a labeled and latching toggle guard and stainless steel protective bracket. The powder coated aluminum enclosure is fully potted and environmentally sealed against water intrusion to IP67 standards. The Manual Release Switch is electrically supervised by the SDRP panel for Normal, Trouble and Fire conditions.

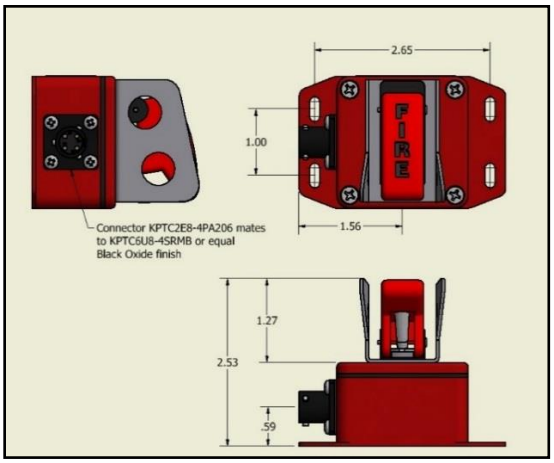

Figure 9 - PN. 830002 Manual Release Toggle Switch

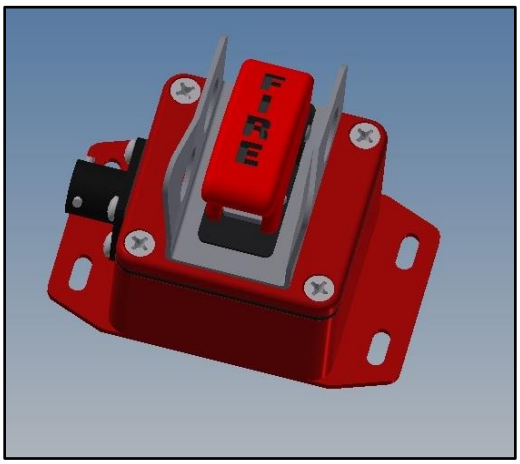

Figure 10 PN. 830002 Dimensions

e. Linear Thermal Detection *(various part numbers)*

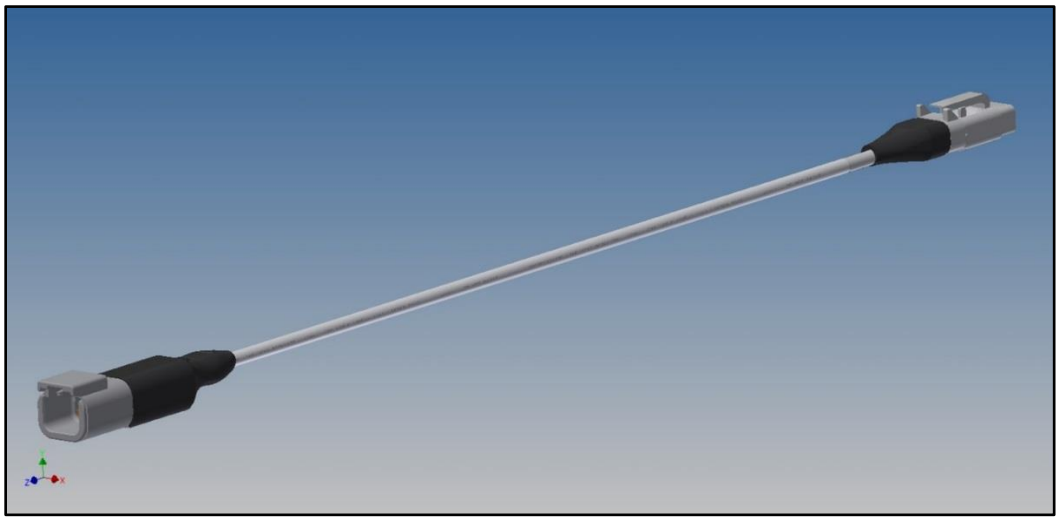

Figure 11 - Linear Thermal Wire

Linear thermal wire allows for continuous thermal monitoring of wide coverage areas. Field wiring connecting the SDRP to linear thermal wire allows an electrical current to flow through the detection circuit, through an End of Line device completing a loop back to the SDRP. If a Fire occurs, the outer and inner insulating jackets of the linear thermal wire melt allowing the individual conductors of the linear thermal wire to electrically “short” together. This change in electrical resistance is interpreted by the SDRP as a Fire condition. The SDRP sends an electrical signal to the Stat-X generator(s) automatically discharging the system. Linear thermal wire is available with alarm temperature ratings of 135ºF, 155ºF, 190ºF, 220ºF, 280ºF and 356ºF and must be terminated with PN 830007 EOL.

f. Spot Thermal Detection *(various part numbers)*

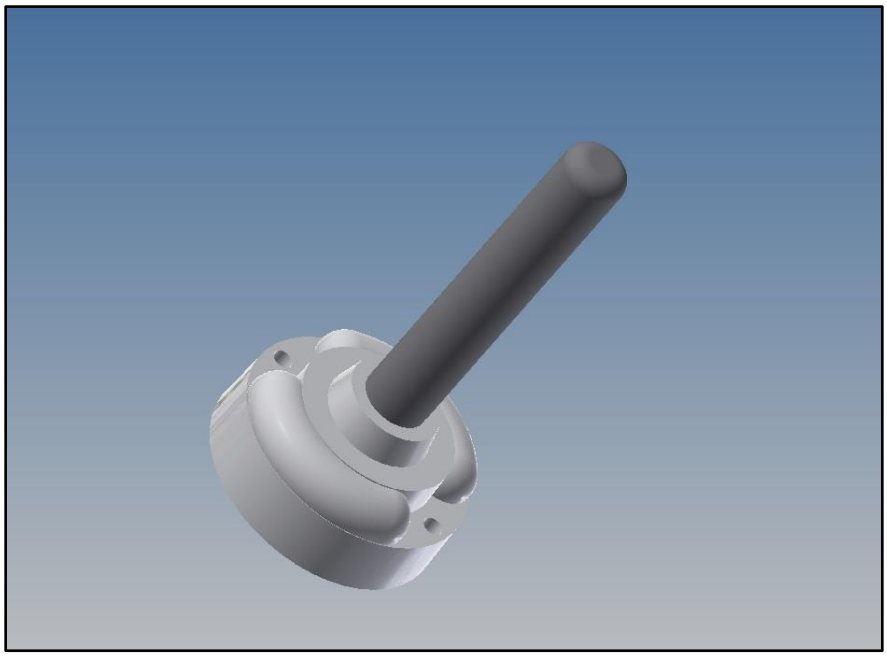

Figure 12 - Spot Thermal Sensor

Spot thermal detectors allow for continuous thermal monitoring of limited coverage areas. Field wiring connecting the SDRP to spot thermal sensors wired in parallel allow an electrical current to flow through the detection circuit, through an end of line device completing a loop back to the SDRP. If a fire occurs, the normally open contacts in the spot thermal close. This change in electrical resistance is interpreted by the SDRP as a fire condition. The SDRP sends an electrical signal to the Stat-X generator(s) which causes a system discharge. Spot thermal detectors are available with alarm temperature ratings of 135°F and 194°F and must be terminated with PN 830007 EOL. The spot thermal detectors are rated for a variety of environments including Vertical Interior, Vertical All Weather, Vertical ½" Conduit and Explosion Proof.

g. Detection End of Line (EOL) device PN 830007

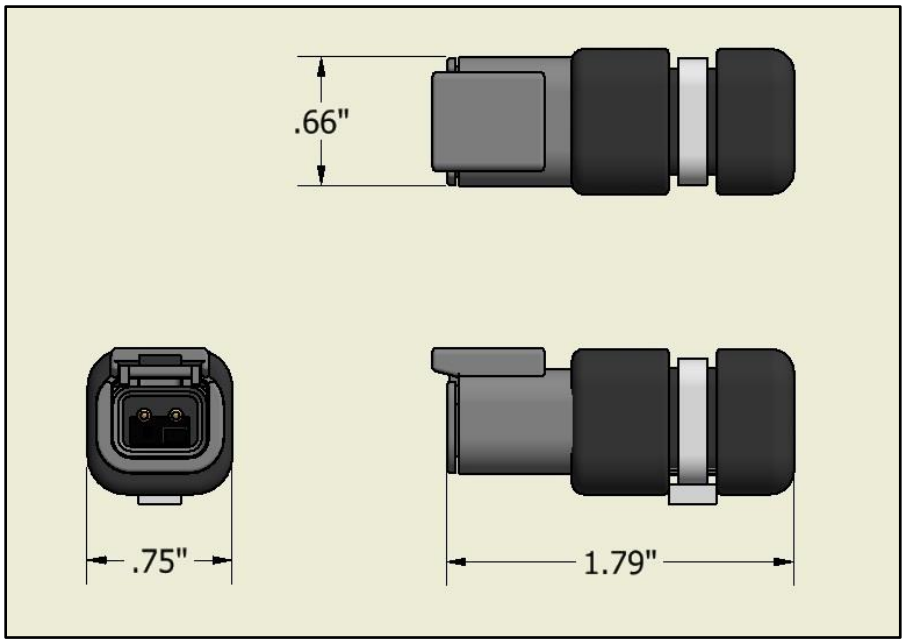

Figure 13 – 470k ohm End of Line device

Class B detection circuits require a resistor to be placed in series in the circuit. The end of line device (EOL) PN 830007 provides a series resistance of 470k ohms. The EOL consists of a two position Deutsch connector with an over molded 470k ohm resistor. The EOL provides a high resistance closed loop to each of the SDRP panel's two detection circuits. A break or open in the circuit indicates a Trouble condition to the SDRP. A detection circuit closure of approximately 100 ohms indicates a fire or over heat condition to the SDRP.

h. Detection Zone Field Wiring

- Field wiring to be UL listed Plenum cable, 18 awg, solid annealed bare copper per ASTM B3 with PVC jacket or equal
- Maximum number of Detectors per SDRP Detection Zone = 100
- Maximum Total Detection Zone Wiring Length = 500 feet (152 meters)
- Terminate thermal detectors to field wiring via terminal strips or soldering
- Ensure connection is clean, mechanically secure and free free from moisture and corrosion
- End of Line device connector is DTM04-2P which mates to DTM06-2S

Spot Thermal Sensors wired in parallel with p/n 830007 End of Line device

Field wiring used to connect between the SDRP and each spot thermal detector must be at a minimum UL Listed Plenum wire, 18 awg. Parallel field wiring is used between detectors. Detection field wiring must be protected in emt/conduit between each detector.

A terminal strip connection may be used if the connection is made inside of a watertight/mechanically protected housing or enclosure.

SDRP Detection Resistance Chart

Alarm	Trouble	System OK	Trouble
0 - 100 Ohms	101 - 10k Ohms	10k - 500k Ohms	500k - ∞ Ohms

i. Actuation Zone Field Wiring

- Field wiring to be UL listed Plenum cable, 18 awg, solid annealed bare copper per ASTM B3 with PVC jacket
- Maximum number of generators per SDRP Actuation Zone = 2
- Maximum Total Actuation Zone Wiring Length = 100 feet (30 meters)
- Terminate Generators to Field Wiring via terminal strips or soldering
- Ensure connection is clean, mechanically secure and free free from moisture and corrosion

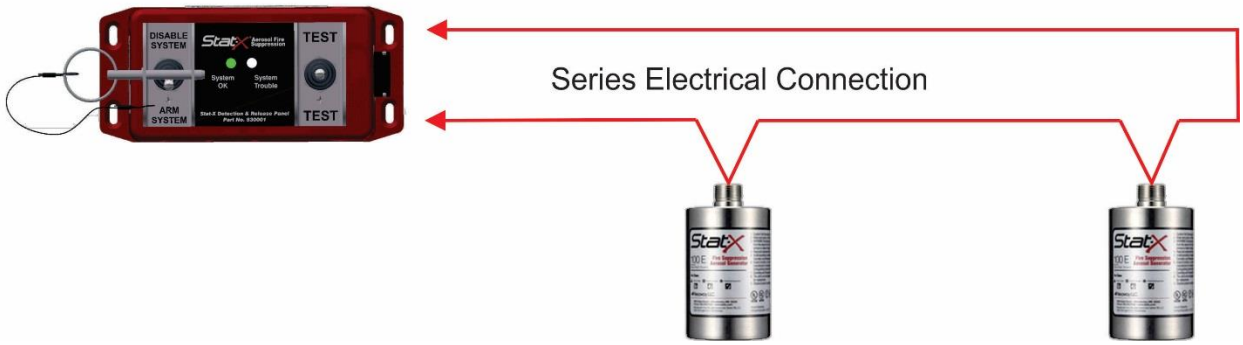

Figure 14 - Sample Actuation Circuit Wiring

- Field wiring used to connect between the SDRP and each Stat-X generator must be at a minimum UL Listed Plenum wire, 18 awg. series field wiring is used between generators which is easily supervised by the SDRP. Parallel field wiring is acceptable but must be protected in emt/conduit as individual Stat-X generators are not supervised by the SDRP.

- Wiring connections must be secure to deliver electrical energy to each Stat-X generator. The ideal connection is a soldered connection using a no clean, non-corrosive solder, and flux. Wire surfaces must be clean prior to soldering.

- A terminal strip connection may be used if the connection is made inside of a watertight/mechanically protected housing or enclosure.

4. Hazard Analysis

Refer to the current Stat-X owner's manual PN19001 for generator installation requirements.

5. Inspection and Maintenance

The SDRP panel is designed to be simple and reliable. Inspection and maintenance consists of the following:

<u>Daily Inspection if possible</u>

With the SDRP panel in "Armed" mode, flip the test toggle switch up or down.

- The "System OK" LED should appear **green** …

- If the "System OK" LED does NOT appear **green** and the **yellow** "System Trouble" LED appears Yellow ⟶ Go to system trouble shooting …

- If NO LED's are ON ⟶ Go to system trouble shooting …

<u>Monthly Inspection</u>

Visually inspect field wiring …
- Check Automatic Detection circuit for any damage or other changes.
- Verify spot thermal detectors or linear thermal wire has not been painted, damaged or blocked from thermal sensing
- Check Stat-X actuation wiring for any damage, contact corrosion or changes which might affect proper operation.
- Check detection circuit end of line device for any damage or other changes.
- Check Manual Release Switch for any damage or other changes.

<u>Annual Inspection</u>

1. Before performing any detection circuit tests, attach alarm module PN 830002 to both SDRP actuation circuits.
2. Flip the "test" toggle switch on the SDRP to verify "System OK" operation.
3. Spot thermal detection test
    a. Use a heat gun to heat each spot thermal sensor to its alarm set point. Use a thermocouple to verify proper temperature.
    b. Each alarm module will latch in a "fire" condition when the spot thermal sensor reaches its alarm set point.
    c. Allow each spot thermal sensor to cool below its alarm set point.
    d. Press the "System Reset" button on the alarm module to clear the "alarm" condition.
    e. Continue testing the remaining spot thermal sensors.
4. Linear thermal detection test
    a. Linear thermal detection wiring cannot be tested using a heat gun!!
    b. Remove the PN 830007 end of line device from the detection circuit.
    c. Replace the end of line with a PN 830003 manual test switch.
    d. Flip the Manual Test Switch toggle to simulate a linear thermal "alarm" condition.
    e. Each alarm module will latch in a "fire" condition when the Manual Test Switch is activated. Return the manual test switch to normal operation.
    f. Press the "System Reset" button on each alarm module to clear the "Alarm" condition.

g. Continue testing the remaining linear detection circuits.

5. Replace internal batteries every three years at a minimum or following any system discharge.
6. Remove alarm modules.
7. Reconnect Stat-X generators.
8. Prior to re-commissioning the system, perform a final test by toggling the “TEST” switch. The “System OK” LED should appear green.

-- The SDRP System is now operational –

SDRP Internal Battery Replacement Procedure

The batteries used with the SDRP are a lithium thionyl chloride chemistry. They cannot be recharged. Only use our PN 830009 as a replacement.

1. See figures #10 & #11 below.
2. Remove panel from mounting position.
3. Remove pull pin and flip toggle switch to “Disable System” position
4. Replace pull pin.
5. Disconnect circular connector and wiring harness from SDRP.
6. Remove qty. four (4) #6-32 x 5/8” screws from mounting plate.
7. Remove gasket from mounting plate.
8. Remove and replace two (2) batteries and replace with new batteries PN 830009
9. Reinstall new gasket.
10. Replace mounting plate and screws. Torque to approximately six (6) to nine (9) in-lbs.
11. Replace SDRP panel at original mounting position.
12. Remove pull pin and flip toggle switch to “Arm System” position.
13. Replace pull pin.
14. Record replacement date on supplied label and attach label to control panel

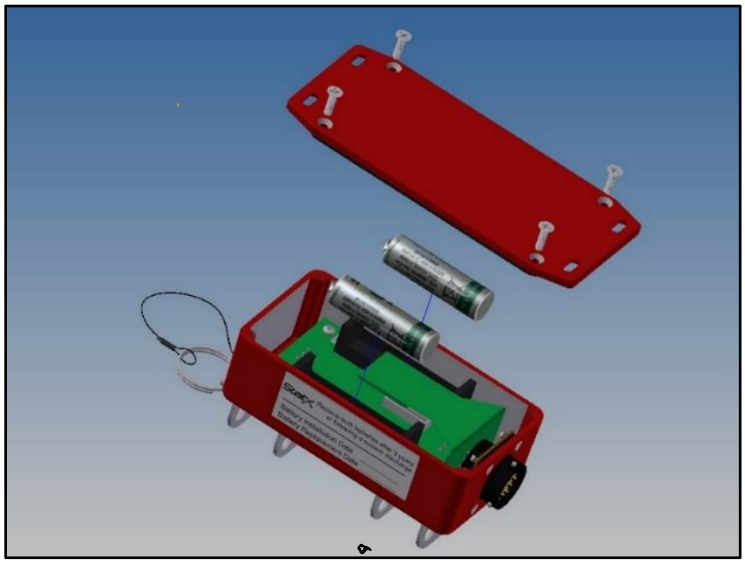

Figure 15 - Internal Battery Replacement Diagram

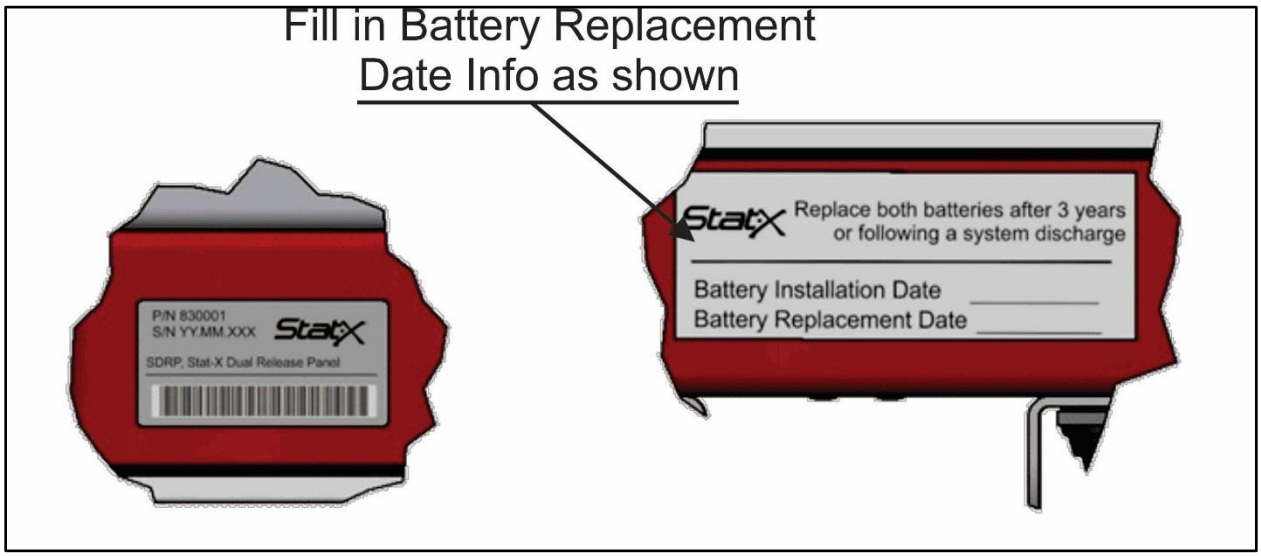

Figure 16 - SDRP battery replacement data to be completed annually when batteries are replaced

6. System Alarms and Troubleshooting

Normal Operating Condition

Flip the TEST toggle Switch to Test the SDRP system …

Front Panel Display	System OK – Green LED ON System Trouble – Yellow LED OFF
Indicates	Status
Detection Field Wiring	Continuous circuit with correct resistance
Actuation Field Wiring	Continuous circuit with correct resistance
Manual Release Switch	Continuous circuit with correct resistance
Disable Switch Position	In “Arm System” position
Internal Batteries	In place with correct voltage

Trouble Condition

Front Panel Display	System OK – Green OFF System Trouble – Yellow ON
Indicates	Status
Detection Field Wiring Problem	<u>Possible Open Condition</u> • Check to see if SDRP to field wiring circular connector is tight and connected • Check to see if end of line device is in place • Check all sensors and wiring • Check for any wiring damage or breaks
Actuation Field Wiring Problem	<u>Possible Open Condition</u> • Check to see if SDRP to field wiring circular connector is tight and connected • Check Stat-X generator to field wiring connection is intact • Check for corrosion at Stat-X generator to field wiring connection • Check actuation circuit for any breaks or damage • Verify Stat-X generator has not discharged
Manual Release Switch Problem	<u>Possible Open Condition</u> • Check to see if SDRP to field wiring circular connector is tight and connected • Check field wiring to Manual Release Switch circular connector is tight and connected • Check field wiring to manual release switch for any breaks or damage
Disable Switch Position	<u>Disable Switch Position</u> • Check the “Arm System-Disable System” toggle switch is in the proper position
Internal Battery Problem	<u>Possible Low Voltage Condition</u> • Check replacement date for batteries, if more than three (3) years, replace batteries

7. System Parts List and Replacement Parts List

Part Number	Component Description
830001	Control Panel, SDRP, Battery Powered Panel,
830002	Module, Test,
830003	Switch, Toggle, Manual Release,
830006	Cable Assy, SDRP, Battery Powered Panel, *(24" Unterminated Actuation Leads)*
830007	EOL Assy, Detection, Class B, Deutsch
830009	Battery Kit, Replacement for 830001, LiSOCl
830010-xxx	Sensor, Spot Thermal, Thermotech xxx deg F, Vertical Internal
830011-xxx	Sensor, Spot Thermal, Thermotech xxx deg F, Vertical All Weather
830012-xxx	Sensor, Spot Thermal, Thermotech xxx deg F, Vertical All Weather 1/2 Conduit
830013-xxx	Sensor, Spot Thermal, Thermotech xxx deg F, Explosion Proof
830020-xxx	Linear Thermal Wire, 155ºF Type XCR, xxx' length
830021-xxx	Linear Thermal Wire, 190ºF Type XCR
830022-xxx	Linear Thermal Wire, 220ºF Type XCR
830023-xxx	Linear Thermal Wire, 280ºF Type XCR
830024-xxx	Linear Thermal Wire, 356ºF Type XCR
830025-xxx	Linear Thermal Wire, 135ºF Type XLT

8. Miscellaneous Notes

a. Battery Storage

STORAGE: Store in a cool, regulated (preferably below 21°C and in any case below 30°C), dry and ventilated area, away from possible sources of heat, open flames, food and drink. Avoid exposure to direct sunlight for long periods. Temperatures above 100°C (or higher for high temperatures cells and batteries such as the LSH20-150 cell, refer to individual data sheets for maximum temperatures) may cause leakage and rupture, and result in shortened battery service life. Keep proper clearance space between batteries and walls. A short circuit can cause burn hazard, leakage or explosion hazard. Keep batteries in original packaging until use and do not mix them.

HANDLING:
- Do not open the battery system.
- Do not crush or pierce the cells.
- Do not short (+) or (-) terminal with conductors.
- Do not reverse the polarity.
- Do not submit to excessive mechanical stress.
- Do not mix batteries of different types or mix new and old batteries together.
- Do not use the unit without its electronic management system.
- Do not expose the unit to water or condensation.
- Do not directly heat, solder, or throw into fire.

b. Actuation Wiring

- The actuation circuit wiring is critical to the proper operation of the SDRP
- Take care in making and securing all electrical connections
- Water and corrosive atmospheres are never good for electrical circuits. Take care to prevent water and corrosive atmospheres from damaging electrical connections
- Wire to-be UL listed Plenum cable, 18 awg, solid annealed bare copper per ASTM B3 with PVC jacket (Carol E3602S.41.03 or equal).
- Field wiring must be protected by metal conduit or equal.
- Terminate as needed using Deutsch terminals and connectors as described in part no. 830006. Crimp terminals and crimp using #5 setting for 18 gauge pin. After crimping, use Kester 1544 soldering flux and solder using no clean, lead free SN100 solder to bond terminal to solid formed wire.

9. Warranty

LIMITED WARRANTY STATEMENT

Fireaway Inc. represents that this product is free from defects in material and workmanship, and it will repair or replace any product or part thereof which proves to be defective in workmanship or material for a period of eighteen (18) months from the date of first shipment from our factory. Defective units should be returned shipment prepaid to the factory.

Fireaway Inc. will repair or replace and return shipping prepaid. Return or repair shall be the purchaser's sole remedy for defect.

Limitations of Liability

This warranty does not cover equipment damaged during shipment or by misuse, accident, or negligence, or which has been repaired or altered by others. Fireaway Inc. shall not under any circumstances be liable for special or consequential damages such as, but not limited to, damage or loss of property or equipment, loss of profits or revenue, cost of capital, cost of purchased or replacement goods, or claims by customers of the original purchaser. Remedies set forth herein to the original purchaser and all others shall not exceed the price of the equipment supplied.

This warranty is exclusively and expressly in lieu of all other warranties, whether expressed or implied, including warranty of merchantability or fitness.

A DETAILED MANUAL MAY BE OBTAINED BY CONTACTING THE MANUFACTURER:

Fireaway

5852 Baker Road
Minnetonka, MN 55345
U.S.A.

Tel: 925-935-9745
Fax: 952-935-9757
www.statx.com